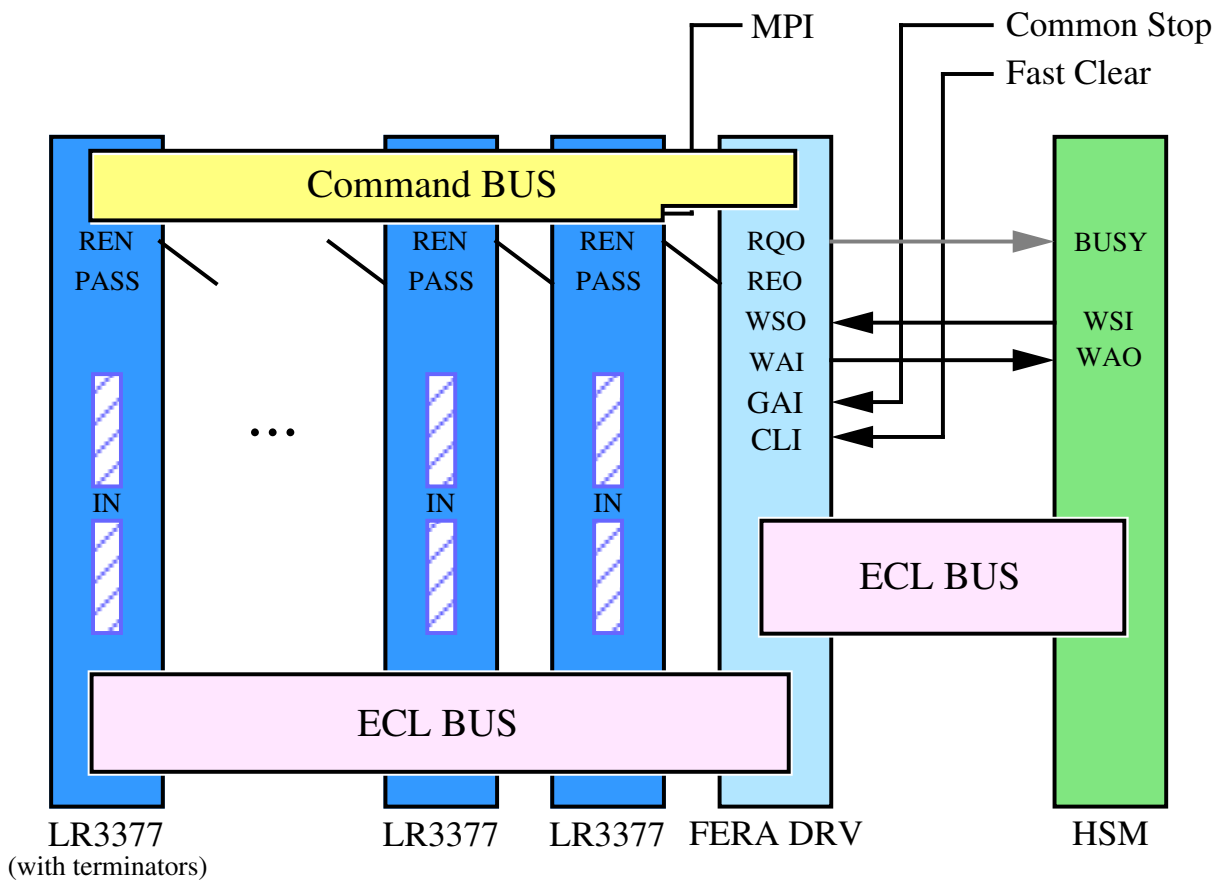

LR3377 Circuit Diagram